USER'S MANUAL

Omniflex

Omniwatch Machine Monitor
Model O4001A

Scope

This User Manual provides information necessary to install, configure and operate your Omniwatch Machine Monitor.

Omni-Watch O4001A is an integrated machine monitoring system that provides on-line status information, alarm and trip outputs, signal re-transmission and an historical log of events. It accepts fully isolated analogue inputs which may be thermocouples, resistance temperature devices, voltage and current. An interactive LCD display provides enhanced user interface and programmability allowing the user to view status information, time stamped events and configure the entire Omni-Watch system. Omni-Watch may also be connected to the Conet network, making status and time stamped information available to other Omniflex devices such as Maxi-Larm Distributed Alarm Annunciator and the PC-based Omni-4000 alarm package.

Contents

1 Introduction

1.1 Description

The Omni-Watch Machine Monitor is a highly configurable, user friendly, machine monitoring device that usually operates as a standalone unit but can easily be integrated into a distributed system using the Conet network.

It has been designed to monitor up to 16 analog inputs of varying types. It provides two setpoints of either high or low orientation and engages an alarm sequence on alarm conditions. LEDs and a buzzer on the front panel annunciate alarm conditions as they occur. The front panel LCD and keypad provide the necessary operator interaction for processing these alarms. Outputs are available for each setpoint with either normally open or normally closed operation. It also offers re-transmitted analog outputs for all analog inputs.

Figure 1.1 below is a functional block diagram of Omni-Watch.

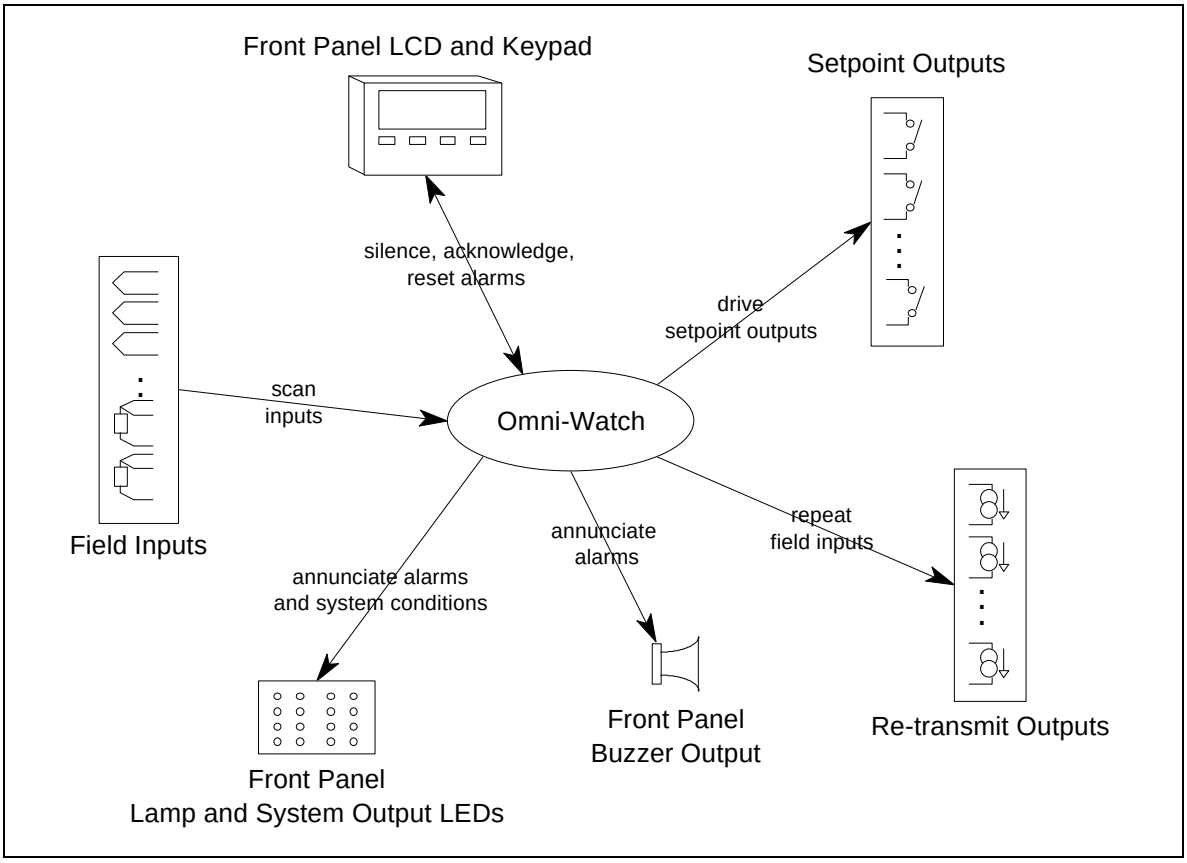

Figure 1.1: Functional Block Diagram

All alarm and return to normal events are recorded and can be viewed via the front panel display. The front panel also allows operator interaction to silence, acknowledge and reset alarms.

The machine monitor is intended for operation in a control room environment where the operator, installation and/or system engineer may make use of the simple user interface to accomplish all desired tasks available on Omni-Watch. These range from the everyday tasks of machine monitoring and event logging to the less frequent tasks of configuration changes.

Due to its diversity, this user manual has been written to cater for three different kinds of readers:

- system integration engineer
- installation/configuration engineer
- control room operator

The installation/configuration engineer will primarily be concerned with installing Omni-Watch, getting the program up and running and configuring the system according to the system engineer's requirements. He should read section 2 "Setting up Omni-Watch" and section 3 "Configuring Omni-Watch".

Section 3 also provides detailed information about Omni-Watch through the configuration process. This information is of interest to the system engineer in deciding options for configuration.

The control room operator has no use for the more technical details of Omni-Watch and only requires the knowledge of using Omni-Watch on an everyday basis. He should read section 4 "Operating Omni-Watch".

Section 5 "Specifications" will be of interest to the system engineer and/or the installation engineer.

1.2 Features

- range of analog input modules supported: thermocouple, resistance temperature device, voltage and current
- more than one type of analog input module may be used
- analog inputs may be re-transmitted as 4-20 mA signals
- two setpoint outputs per input
- each setpoint may be configured for high or low alarm
- each setpoint can drive a no/nc relay output
- removable input labels for the front panel
- protection of configuration if desired

- three configurable alarm sequences
- two configurable group alarm outputs
- three different modes group alarm operation
- two additional fixed group alarm outputs
- silence, reset, accept alarms from the front panel

- led indication of setpoint
- group alarm output led indication
- group alarms can drive normally energised relays
- horn on led indication
- horn output can drive relay output
- configuration fault led indication
- module fault led indication

- auto-scroll feature to view Input information behind an enclosed panel
- auto route to main screen after time out during configuration
- auto route to main screen on alarm except during configuration
- led and buzzer test
- remote data access over Conet network
- instantaneous input level display of selected input
- up to three decimal point display resolution

2 Setting up Omni-Watch

2.1 Installing the Hardware

Omni-Watch is delivered in component form and should be assembled at the installation site. For standard systems the following items will be delivered:

- Omni-Watch front panel with a 3 I/O Maxiflex master base fixed on the rear
- Maxiflex power supply module to power the master base and Omni-Interface
- Maxiflex CPU
- Maxiflex I/O modules

If a larger system has been ordered then there are additional components:

- Maxiflex expansion base
- expander cable to connect to the master base
- Maxiflex power supply module to power the expansion base

Assembly of the hardware is simple once the Omni-Watch front panel has been mounted. Refer to Appendix III for the mechanical mounting detail.

While any number of I/O modules can be used in Omni-Watch, the **order** in which these I/O modules are plugged into the master and/or expansion bases is **pre-defined** as follows:

Installation Order	I/O Module Description
first	analog input modules for field inputs
second	analog output modules for re-transmit outputs
third	digital and/or relay output modules for outputs of the first alarm setpoint
fourth	digital and/or relay output modules for outputs of the second alarm setpoint
fifth	digital or relay output module for system outputs

Table 4.2: Installation order of I/O modules for Omni-Watch

For example, a larger system may be configured as follows:

SLOT NUMBER:	SLOT 1	SLOT 2	SLOT 3	SLOT 8	SLOT 9	SLOT 10	SLOT 11
FUNCTION:	Analog Inputs 8TC/mV	Analog Inputs 8VC	Analog Outputs 8AO	Analog Outputs 8AO	Setpt 1 Outputs 16DO	Setpt 2 Outputs 16DO	System Outputs 8RO

If, however, the system does not make use of all the above modules, he is able to optimise the use of slots efficiently. e.g. if only 8 analog inputs are required without setpoint outputs, then the I/O modules could be installed as follows:

SLOT NUMBER:	**SLOT 1**	**SLOT 2**	**SLOT 3**
FUNCTION:	Analog Inputs 8TC/mV	Analog Outputs 8AO	System Outputs 8RO

The user may not simply install any module in any slot.

The power supply and the CPU may only be installed in their own designated slots. The Maxiflex bases do indicate where the power supply and CPU module is to be placed. BE SURE TO INSTALL THE POWER SUPPLY AND THE CPU IN THEIR CORRECT SLOTS. Incorrect installation may cause hardware failure. The sketch below shows where these modules are to be placed.

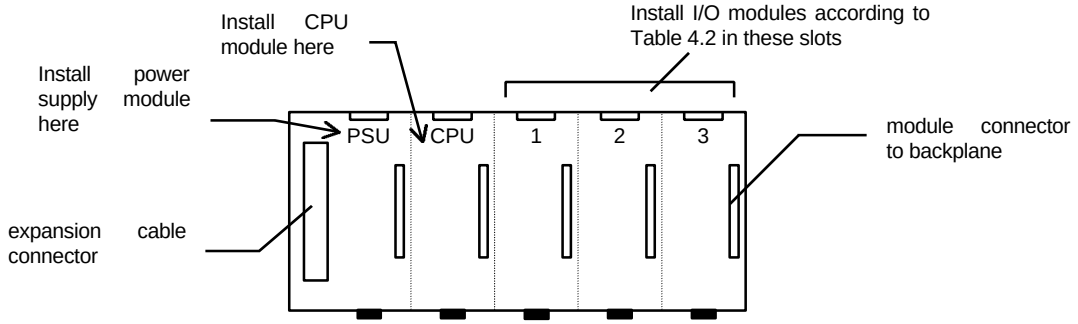

Maxiflex 3 I/O Master Base
(attached to rear of front panel)

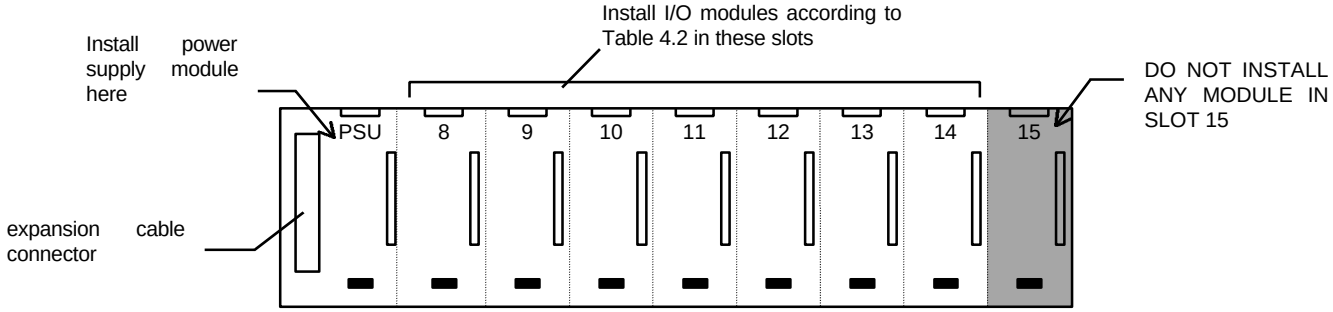

Maxiflex 8 I/O Expansion Base

In the case of an expanded system, the expansion cable remains to be connected to the master base and the expansion base. Note that a Power Supply Module is not required for 5 I/O Expansion Bases.

Once installation is complete, the software can be installed.

General Electrical wiring details are provided in Appendix IV. For more details, refer to the General Instruction booklets that come with the modules

2.2 Installing the Software

Most Omni-Watch systems are delivered with the application program already downloaded. This is easy to tell by simply turning on the power to the unit: the RUN LED on the CPU will turn ON (after a few seconds) and the LCD screen on the front panel will light up with the “Omni-Watch Machine Monitor” title displayed on the top line. If this is the case then it is not necessary to follow section 2.2.3. The engineer will usually require that special input labels be downloaded to the CPU. If this is not the case then this whole section can be omitted.

Downloading the program is easily accomplished by running a Omniflex Windows utility called “Easy Download for Windows”.

2.2.1 Requirements

- Omni-watch floppy/stiffy disk
- PC running Windows 3.1 or greater
- PC serial port or PC Conet card
- Maxiflex CPU programming cable or Conet cable

2.2.2 Installing Easy Download for Windows

The first step is to start up Windows on the PC.

1. Using the File Manger, create the following directories from the root directory:
   \DOWNLOAD
   \4TH
   \OMNIWAT

2. Copy the files from the disk provided into these directories as follows:

\DOWNLOAD :-	edwin.exe
\4TH :-	download.4th labels.4th omniwat.4th
\OMNIWAT :-	omniwat.aax labels.txt

3. Create a Program Group called Omniflex Utilities and add a program item called Easy Download for the windows downloader. Make the working directory C:\4TH.

2.2.3 Downloading Omni-Watch

1. If the download is via the serial port, plug the d-type connector of the programming cable into the serial port of the PC (COM1 or COM2) and the other end into the programming port of the CPU and power up the CPU. If download is via Conet, plug the d-type connector of the Conet cable into the PC Conet Card in the PC and plug the other end into the Conet port of the CPU. Turn on the power to the CPU.

2. Run Easy Download for Windows. Select Options|Communications. Select either serial port or Conet card and set-up either the serial COM port or the base address of the Conet card.

3. Then select File|Open. Choose a file from the 4TH directory called “omniwat.4th”. Some text of the Forth file will appear in the text display window. It is not possible to edit this text.

4. Once the file has been opened, select File|Download. The file is now being downloaded to the CPU. This will take a few minutes.

   Note: the user may get the following error the first time he downloads:

   ALL ? error number 0

   The users response to this must be NO. He should not be concerned about this particular error.

5. Once the file has been downloaded Omni-Watch will automatically start running.

6. If the user has no need to change the default input labels then the set-up of Omni-Watch is complete and the user may remove the programming cable (or Conet cable) from the CPU.

2.2.4 Configuring User Defined Input Labels

At this point the Omni-Watch application is running and the user wishes to configure his own input labels. There are two things the user needs to do: create a text file containing the input labels and then download these labels to the CPU memory.

Creating New User Defined Input Labels

1. Determine the number of field inputs that are required. These will be either 6, 8, 14 or 16 field inputs.

2. Define the tag name for each input label. THE NUMBER OF CHARACTERS PER INPUT LABEL MUST NOT EXCEED 20 CHARACTERS.

3. Using any Windows (or DOS) text editor e.g. Notepad, the user must create a file called "LABELS.TXT" according to the following format:

```
[number of inputs] LABELS
[input label 1]
[input label 2]
[ ..     ..  .]
[input label n*]
```

** n = the number of inputs*

Note that the number of labels MUST equal the number of inputs entered on the first line. Note also that the words "LABELS" MUST be in capital letters.

An example "labels.txt" file is provided on the disk and looks as follows:

```
8 LABELS
Input # 1
Input # 2
Input # 3
Input # 4
Input # 5
Input # 6
Input # 7
Input # 8
```

Downloading New User Defined Input Labels

1. Once the "labels.txt" file has been created, copy the file to the OMNIWAT directory. Be careful not to overwrite old “label.txt” files.

2. Restart Easy Download (if need be), select File|Open and open a new file from the 4TH directory called “labels.4th”.

3. Select File|Download to download the new input labels. This will not take long to download.

4. Once the new labels have been downloaded Omni-Watch will automatically begin running with the new inputs labels loaded.

3 Configuring Omni-Watch

Configuration Menus comprise menu screens and data entry screens. Menu screens are intermediate screens that provide navigation around the menu system. Data entry screens are a means of selecting options and entering data from the keypad towards configuring the system.

Navigation Keys

Navigation and data entry of the Omni-Watch menu system is accomplished using “soft” keys and the Escape (Esc) key. The first three lines of any display will contain a screen title or configuration information while the last line will contain words representing a soft key function for the four keys situated in a row just below the display. Pressing the corresponding key will action the function. The soft key functions are always displayed in capital letters.

The Esc key serves one function and that is to exit any screen in the menu system until the highest screen has been reached. In this case pressing the Esc key will do nothing. Appendix I contains a tree diagram showing the entire menu system for quick reference.

Menu Screen

A typical menu screen looks as follows:

```
        Omni-Watch Set-up Menu


 HARDWARE   QUEUES    SYSTEM     TIME
```

The title of the screen is on the first line of the display with the soft key functions on the last line of the display in capital letters. Pressing the keys below the soft key functions will bring the next relevant screen into view.

Data Entry Screen

Below is a typical data entry screen in the Omni-Watch menu system:

```
Configure Field I/O
Field Inputs        8
New                 16
            PARAM     SELECT    ACCEPT
```

The three right most soft keys in any data entry screen always have the same function:

- PARAM: to scroll through a number of different parameters associated with that configuration item e.g. "Field Inputs". The RIGHT and LEFT arrow keys scroll forwards and backwards through parameter options.
- SELECT: to scroll through a number of selections available for a given parameter e.g. "16". in some cases configuration requires numeric keypad input. In these instances the SELECT key will not be shown indicating that numeric keypad input is required. The UP and DOWN arrow keys scroll forwards and backwards through selection options.
- ACCEPT: once a selection has been made for a parameter, pressing the ACCEPT key will configure the new selection. The ENTER key on the keypad operates in the same way as the ACCEPT key.

Omni-Watch Configuration

There are four distinct sections of configuration for Omni-Watch once the configuration screens have been entered:

- hardware configuration
- queue configuration
- group alarm and sequence type configuration
- setting the real time clock

Each section may be configured independently but it is recommended that the order in which the sections are presented should be followed.

3.1 Entering Omni-Watch Set-up Menus

The first screen the configuration/installation engineer will see when the display is turned on is the Main Menu screen which appears as follows:

```
Omni-Watch Machine Monitor  Ver X.X
Input 1  40 °C      Input Label
Setpt 1  20 °C      Setpt 2  60 °C
 SILENCE     ACK      RESET      MENU
```

This is the usual screen displayed during normal operation and will be discussed in more detail on section 5. Pressing the MENU soft key will display the first level of menu options:

```
        Omni-Watch Main Menu


 SET-UP                LOG    TEST
```

To commence configuration the SET-UP soft key must be pressed:

```
        Omni-Watch Set-up Menu


HARDWARE   QUEUES    SYSTEM     TIME
```

During normal “non-configuration” operation, Omni-Watch will always bring the main top level display screen to view in the event of alarm conditions. This allows the operator to silence and acknowledge alarms as and when they occur. This type of operation is not desired during configuration as alarms occurring as a result of configuration changes would continuously change the screen and hamper the configuration process.

Therefore whenever the engineer enters the above screen, a 5 minute timer is started and reset for any key pressed in any menu lower than this one. During this time, there will be no screen change on alarm. This allows the engineer to configure Omni-Watch uninterrupted by false alarm conditions arising during the configuration process. If the engineer leaves the system displaying any of the configuration screens for longer than 5 minutes, the Normal Mode Display will appear and the system will automatically re-configure.

Once configuration is complete and the engineer escapes from the above screen, Omni-Watch does a complete re-configuration to effect the new changes.

Configuration changes can be barred from the front panel once configuration is complete. This is known as “configuration protection”. By writing a non-zero value to a particular register (register 130) in the CPU’s Data Interchange Table (refer APPENDIX II), all subsequent attempts to enter the SET-UP menu screens will result in the Main Menu Screen being displayed. Until this register is reset to zero, there is no access to the SET-UP menus.

Access to the Data Interchange Table is possible using OMNIFLEX's Chatterbox Utility. Consult your nearest OMNIFLEX agent for details of this PC-based Utility and how to interface to the CPU.

3.2 Configuring Hardware

Omni-Watch Hardware requires configuration in two areas: field I/O configuration and input configuration. The field I/O MUST always be configured first.

3.2.1 Field I/O

Field I/O is interfaced to Omni-Watch using Omniflex's Maxiflex product range. Products include CPUs, I/O modules and module bases. Omni-Watch supports a wide range of analog and digital I/O modules making Omni-Watch suitable for many different machine monitoring applications.

Following is a list of Maxiflex products that are suitable for Omni-Watch applications.

Product Description	**Function**	**Model Number**
Module Bases:		
3 I/O Master Base (expandable)	Base for Maxiflex modules behind Omni-Interface	M1021A
5 I/O Expander Base	Expansion base to accommodate more modules	M1031A
8 I/O Expander Base	Expansion base to accommodate more modules	M1032A
Power Supplies:		
24Vdc Logic PSU	Power supply for 24V dc systems	M1102A
110/220Vac Logic/Field PSU	Power supply for mains with no battery backup, plus isolated 24Vdc output for powering field contacts	M1151A
110/220Vac Logic + 0.5A Charger PSU	Power supply for mains with battery backup	M1152A
CPUs:		
8 bit CPU	Standard CPU for stand alone systems	M1211B
8 bit CPU with integral Conet network port	Standard CPU for networking systems	M1212C
8 bit CPU with integral Conet$^{/+}$ network port	Standard CPU for networking systems	M1213C
I/O Modules:		
6 RTD ISO input module	Resistance Temperature Device field input	M1433A
8 TC/mV input module	Thermocouple field input	M1432A
8 VC ISO input module	Isolated Voltage/Current field inputs	M1431A
16AI standard input module	Non Isolated voltage or current field inputs	M1403A
8AO output module	Re-transmit analog outputs	M1412A
16DO digital output module	Open collector digital setpoint or system outputs	M1342A
8RO relay output module	Relay setpoint or system outputs	M1372A

Table 3.1: Supported Maxiflex Products

A selection of products is made from the above table when an Omni-Watch system is ordered.

Field inputs and outputs must be configured on a functional basis without regard to the actual type of modules used. For example, an RTD module and a TC module represent two different types of inputs but they both serve a "field input" function.

There are five functional groups of field I/O:

- field inputs
- re-transmit outputs
- setpoint 1 outputs
- setpoint 2 outputs
- system outputs

Field I/O is configured on a quantity basis. Using the above example, an RTD module (having six channels) and a TC module (having 8 channels) will yield an amount of 14 field inputs. Therefore 14 field inputs must be configured.
The number of re-transmit outputs must be configured if analog output modules are being used to re-transmit 4-20 mA signals equivalent to the corresponding field inputs.

Setpoint 1 and setpoint 2 outputs must be configured if digital or relay output modules are being used to output the current status of the set-points.

If a digital or relay output module is being used to output Omni-Watch system outputs, then the number of system outputs must be configured.

Omni-Watch has the following system outputs:

Output #:	Output Type	Description
1	Group Set Point 1 Output	A group output for all alarms of the first setpoint output.
2	Group Set Point 2 Output	A group output for all alarms of the second setpoint output.
3	Horn Output	An output for an external horn. The output is activated when the front panel buzzer is on.
4	Module Fault	Output is activated when modules have been removed and/or incorrectly replaced without re-configuring the system.
5	Configuration Fault	Output is activated when modules installed are not compatible with the field I/O configuration.
6	CPU Battery Low	Output is activated when the CPU battery level is detected as being low.

Table 3.2: Omni-Watch System Outputs

For more details on group alarms, refer to section 3.4 “Configuring System Group Alarms and Sequences”.

In order to configure the field I/O follow the tree diagram below to reach this menu screen:

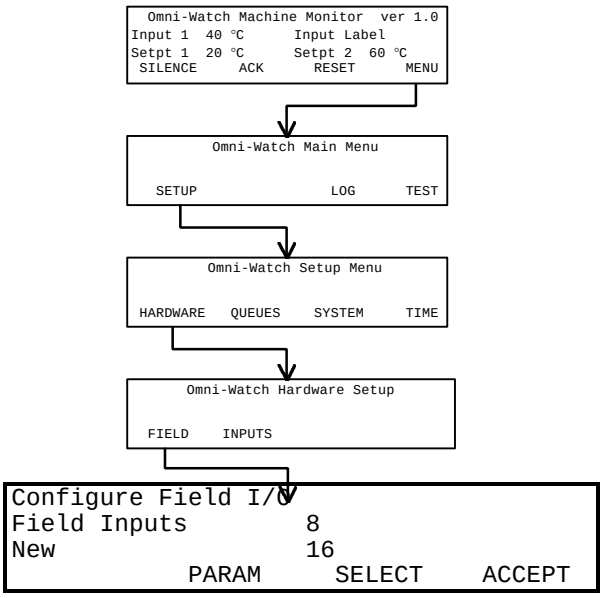

Table 3.3 shows the configuration parameters (field I/O types) and the associated selections (number of I/O).

PARAMETERS	SELECTIONS
Field Inputs	6
	8
	12
	14
	16
Re-transmit Outputs	None
	8
	12
	16
Setpoint 1 Outputs	None
Setpoint 2 Outputs	4
	8
	12
	16
System Outputs	None
	8

Table 3.3: Field I/O set-up options

3.2.2 Inputs

Omni-Watch Machine Monitor scans up to 16 analog inputs from the field. It is possible to use two different input modules in one system so that two different kinds of inputs (e.g. RTD and TC) may be processed.

Omni-Watch requires that a number of parameters be configured before a particular input can be properly scanned. Figure 3.1 below is a hardware representation of the manner in which Omni-Watch processes field inputs.

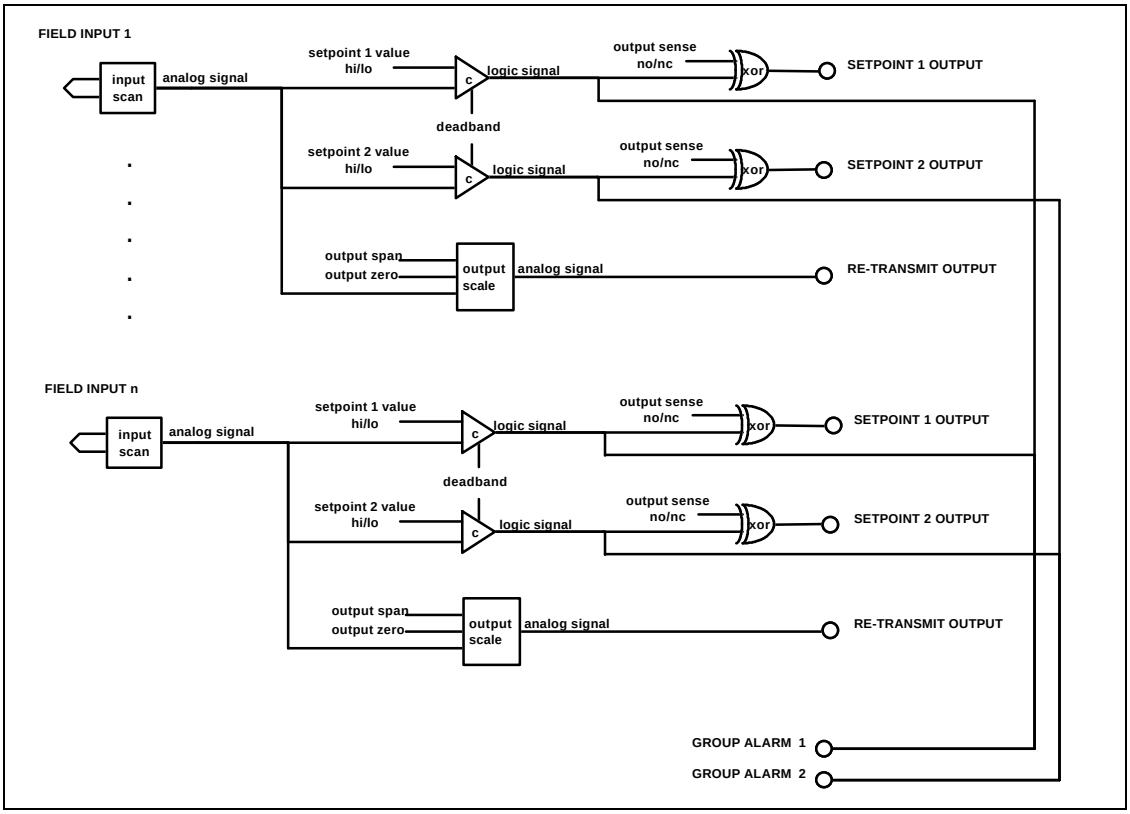

Figure 3.1: Hardware Representation of Field Input Processing

The field input is scanned via the appropriate Maxiflex module and the analog signal derived is compared with two setpoint levels: setpoint 1 and setpoint 2. These set-points may each be configured as HI or LO, both sharing a common deadband value. This allows three different types of alarm/trip configurations:

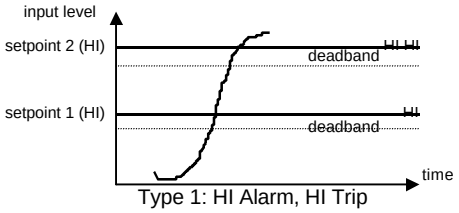

Type 1: HI Alarm, HI Trip

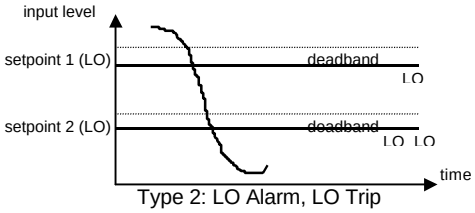

Type 2: LO Alarm, LO Trip

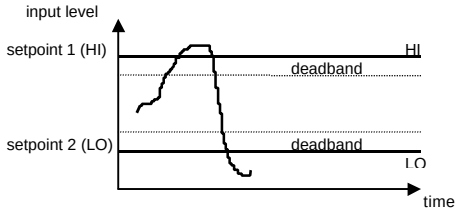

Type 3: HI Alarm, LO Alarm

Each setpoint has an output that can be driven from a digital or relay output module. These outputs may be configured as normally closed or normally open.

Two additional setpoints (setpoint 3 and setpoint 4) are also available as a grouped outputs GA3 and GA4. Setpoint 3 is a fixed HI alarm setpoint while setpoint 4 is a fixed LO alarm setpoint. These fixed setpoints are useful for underrange/overrange detection via group output. Note that there is no LED display for the setpoints but there is LED display for GA3 and GA4 (this applies to later version of OmniWatch Lexan which is used with Omniwatch Version 3.00 and above) .

Analog input signals are also converted to 4-20 mA output signals for re-transmission if desired.

Omni-Watch therefore requires the following information to operate correctly:

- type of field input
- set-points HI or LO
- setpoint outputs NO/NC
- setpoint values
- deadband value
- re-transmit output zero and span

In order for Omni-Watch to display the input values correctly, some additional information is required:

- engineering units
- decimal point display resolution

Table 3.4 provides further details.

In order to configure the necessary parameters for inputs, navigate to the input configuration screen as follows:

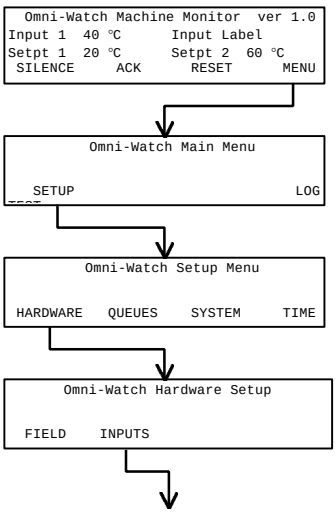

```
Configure Input 1   Input Label
Input Type          TC Type K
New                 TC Type J
  INPUT     PARAM     SELECT    ACCEPT
```

Referring to Table 3.4 below, the following points must be noted when configuring inputs:

I) All VC type inputs with the mA ranges must use a 50Ω 0.1% resistor as this is the resistance programmed by Omni-Watch and cannot be altered.

ii) "Standard Analog" inputs require the M1403A 16AI module.

iii) Input Zero/Span Limits are only applicable to "Standard Analog" input types and entries will be ignored for all other input types.

iv) Setpoint types allow for HI or LO alarm configuration and for energised or de-energised outputs on alarm conditions.

v) Output Zero/Span Limits are only applicable when re-transmit outputs are being used.

vi) Thermocouple modules are programmed by Omni-Watch for upscale burnout only. This cannot be altered.

PARAMETERS	SELECTIONS
Input Type	TC type K
	TC type J
	TC type E
	TC type N
	TC type T
	TC type R
	TC type S
	TC type B
	TC -10..80mV
	VC 0..10V
	VC 2..10V
	VC 0..5V
	VC 1..5V
	VC 0..1V
	VC 0..20mA
	VC 4..20mA
	VC 0..50mA
	VC 10..50mA
	RTD Pt 100
	RTD Ni 120
	Standard Analog
Engineering Units	°C
	°F
	mV
	V
	mA
	A
	%
	(no text)
Display format	-12345
	-1234.5
	-123.45
	-12.345
Input Zero	Keypad Input
Input Span	Keypad Input
Deadband	Keypad Input
Setpoint 1 Type	Abnormal High/Output Energised
Setpoint 2 Type	Abnormal High/Output De-energised
	Abnormal Low/Output Energised
	Abnormal Low/Output De-energised
Setpoint 1 Value	Keypad Input
Setpoint 2 Value	Keypad Input
Output Zero	Keypad Input
Output Span	Keypad Input
GA3 HI Value	Keypad Input
GA4 LO Value	Keypad Input

Table 3.4: Input Configuration Options

3.3 Configuring Queues

Omni-Watch systems that are to be connected to a Omniflex network will make use of a network service call the Queue Service.

This service that allows Omni-Watch to compile "queue" messages or records and send them to other destinations on the network e.g. Omni-4000 (Omniflex's PC based annunciation package) or other Maxiflex nodes that support the Queue Service.

A queue record is compiled every time an input goes into alarm or returns to normal at any setpoint. This queue record is passed to the Queue Service for transmission to the configured destination. There are different types of queue records for different formats and Omni-Watch adheres to Queue Record Type 1. This record type is supported by Omni-4000 so distributed Omni-Watch Machine Monitors can be monitored remotely at a central station.

The format of Queue Record Type 1 is shown below:

- queue record type identifier (1)
- year (0-99)
- month (1-12)
- day (1-31)
- hour (0-23)
- minutes (0-59)
- seconds (0-59)
- milliseconds (0-999)
- DIT number reference (0-3249)
- bit number reference (0-15)
- input state (255=abnormal/0=normal)
- source node address (1-127)

The Queue Service has a number of "output" queues and Omni-Watch makes use of Output Queue 0. This queue has four "heads" through which queue records are transmitted to any node on the network. The use of multiple heads allows more than one destination node to receive the same queue record.

Each head must be enabled to send messages on an unsolicited basis. A first and second address must be configured for each head. The first destination address is the destination address to which all queue records read by that head must be sent. If a communications failure between Omni-Watch and the first address occurs, then the Queue Service will transmit queue records to the second address until the communications link to the primary address has been restored. The Queue Service periodically attempts transmission to the first destination to assess the state of the link. Once the link is re-established, transmission will resume to the first destination.

Each head must also be configured to either discard the oldest records or the most recent records when Output Queue 0 overflows.

In addition to the Queue Service, there are two other network services that are worth mentioning: the Data Interchange Table and the Subscriber Service.

The Data Interchange Table or "DIT" is a large bank of 16 bit registers that resides in the CPU memory. This bank of memory is accessible by any application that runs in the CPU (e.g. Omni-Watch) and any other device on the network that supports the DIT. This gives other Omniflex products (including PC diagnostic packages) the ability to monitor the current input and output conditions remotely over the network. These include PC packages such as Omni-4000, Ezi-Edit and Chatterbox.

Omni-Watch updates the DIT with all run time information automatically (without configuration), thereby providing DIT access to current events in the machine monitor. The layout of the DIT for Omni-Watch is provided in Appendix II.

The Subscriber Service allows data to be transferred between DIT tables of different nodes on a network. It allows a system like Maxi-Larm to “set-up” a “subscription” with Omni-Watch (without any configuration on Omni-Watch) such that the DIT table in the Maxi-Larm node will be continuously updated with information from the DIT table in the Omni-Watch node. This update may be configured on a time interval basis or on a change of state basis. Only the node that requires the information from the other node need be configured (in the above instance, Maxi-Larm). Both nodes have to support the Subscriber Service.

These services allow Omni-Watch to be easily integrated into a distributed system of machine monitors, alarm annunciators and event recorders.

Figure 3.2 below shows how Omni-Watch can be integrated into a typical distributed annunciation system incorporating Maxi-Larm, Omni-4000 and a diagnostic PC.

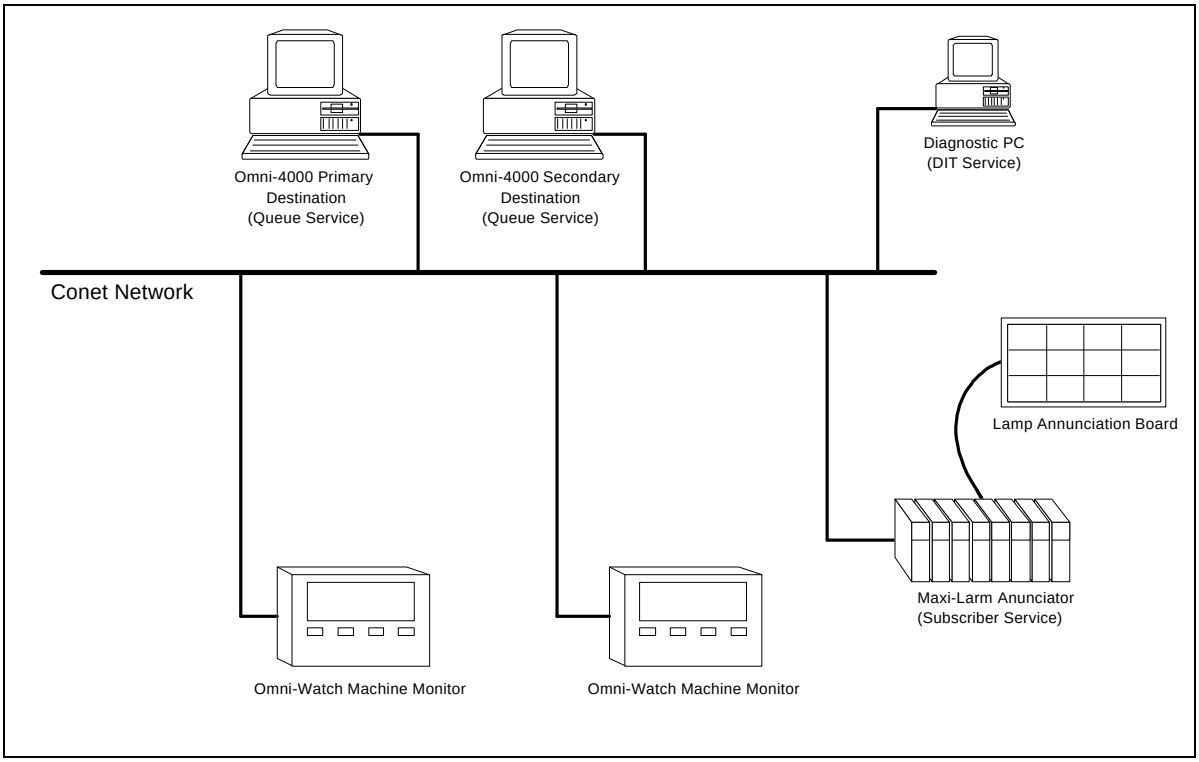

Figure 3.2: Typical Integration of Omni-Watch into Distributed Annunciation system using the Conet Network

The figure shows how the three network services can be used to make full use of Omni-Watch:

The Queue Service is used to send events with time stamped information directly to the Omni-4000 computers for event recording.

Maxi-Larm makes use of the Subscriber Service to access alarm conditions in the Omni-Watch monitors and thereby annunciate them on a larger scale.

The DIT Service is used by a PC running diagnostic software to view the current alarm status of the Omni-Watch monitors (and/or Maxi-Larm) remotely.

For more information on how to use these services, consult the nearest Omniflex office or agent.
As there is no requirement to configure the DIT or the Subscriber Service, Omni-Watch need only make provision to configure the Output Queue 0 of the Queue Service. To accomplish this, navigate to the screen below:

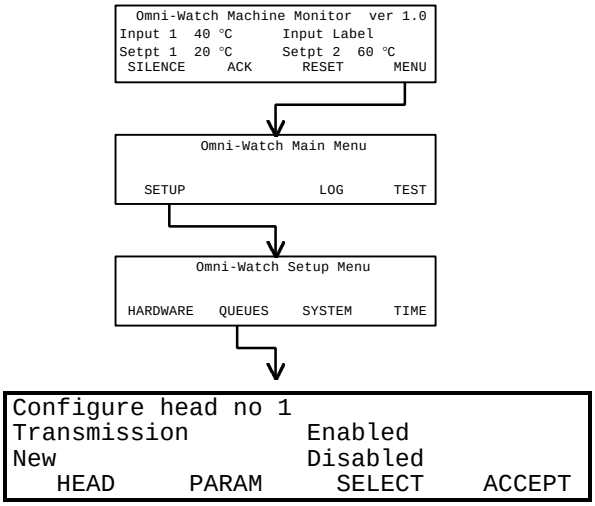

Table 3.5 lists the options for configuring the heads of Output Queue 0.

PARAMETERS	SELECTIONS
First Destination	Keypad Input
Second Destination	Keypad Input
Transmission	Enabled
	Disabled
Q Overflow	Discard Old
	Discard New

Table 3.5: Queue Head 0 Set-up Options

3.4 Configuring System Group Alarms and Sequences

Group Alarms

There are two configurable set-points for each input. They are termed “setpoint 1” and “setpoint 2” and can be grouped to two single outputs namely Group Alarm 1 and Group Alarm 2. These outputs (GAs) provide the means for digital or relay output for each setpoint level i.e. a group output for all setpoint 1 outputs and a group output for all setpoint 2 outputs. Refer to figure 3.1.

GAs are normally energised and can be configured to operate in two ways:

- GA output follows the input state
- GA output follows the alarm state
- GA acts as MRF (Multiple Reflash)

When the group alarm output follows the input state, the output will de-energise when one or more of the inputs (set-points) move into alarm and will energise when all inputs (set-points) move back out of alarm.

When the group alarm output follows the alarm state, the output will de-energise when one or more of the inputs move into alarm and will energise once all the alarm sequences have been reset by the operator.

When the group alarm output acts as Multiple Reflash, the output is normally energised when all setpoints are normal. On the first abnormal setpoint the output will de-energise. On subsequent abnormal setpoints the output will momentarily energise (for about 1 second) and then de-energise.

Alarm Sequences

Included in the function of machine monitoring is the ability to alert the operator when any alarm conditions occur. Omni-Watch provides full alarm annunciation facilities for each setpoint in the system by making use of the front panel LEDs as lamps and the front panel buzzer.

There are three alarm sequences available:

- lamp output follows input state
- fleeting alarm with auto reset
- fleeting alarm with manual reset

The sequences are graphically explained below:

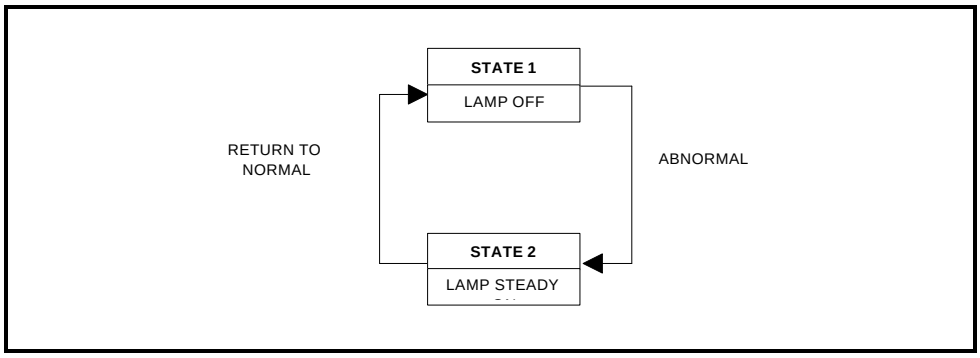

Figure 3.3: Sequence 1 - Lamp Follows Input

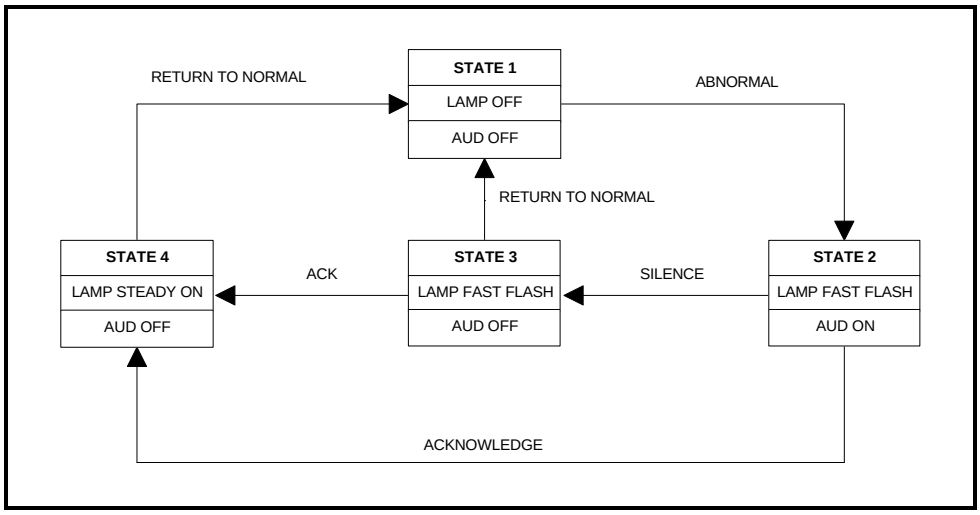

Figure 3.4: Sequence 2 - Fleeting Alarm with Auto Reset

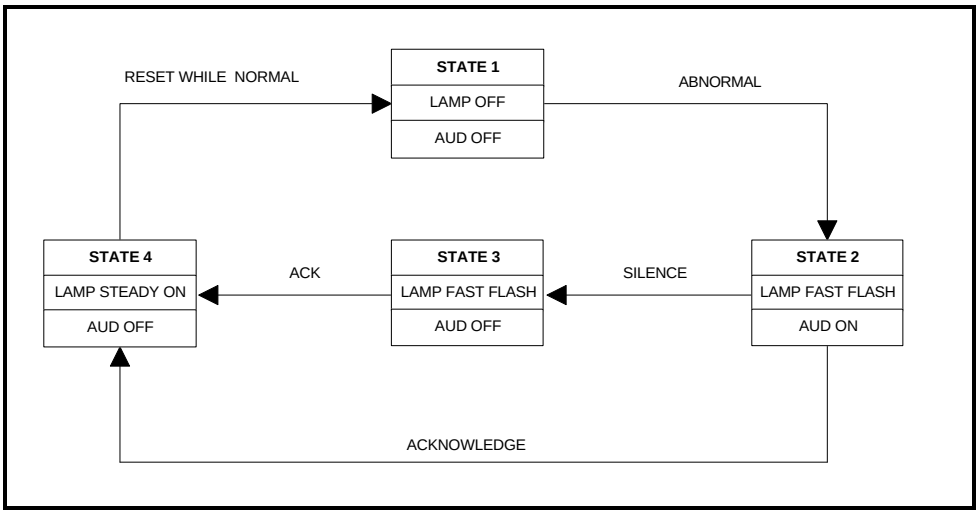

Figure 3.5: Sequence 3 - Fleeting Alarm with Manual Reset

Auto-scroll Operation

Auto-scroll allows the current status of the Inputs to be scrolled automatically in the main window. The scroll rate can be set to either 5 seconds, 15 seconds or Off.

This feature allows operators to view the status of all the inputs without having to touch the keypad. This is particularly useful in applications where the OmniWatch Monitor is fitted behind a glass cabinet.

Group Alarms, Sequences and Auto-scroll are all configured from the same menu screen. Navigate to the System Parameter configuration screen as follows:

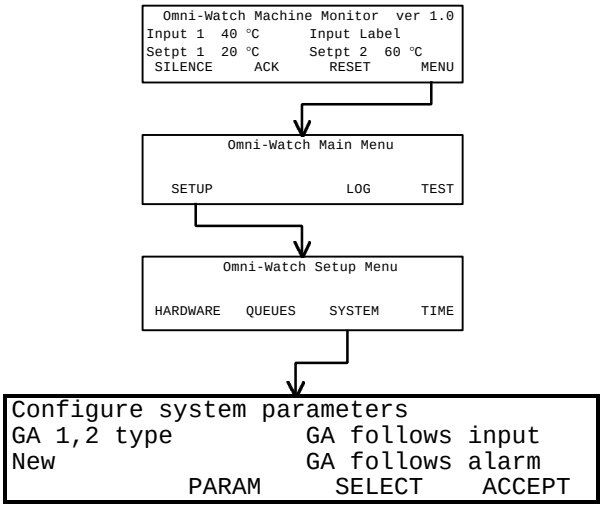

Table 3.6 contains the selections for system configuration.

PARAMETERS	SELECTIONS
GA 1,2 type	GA follows input
	GA follows alarm
	GA as MRF
Sequence Type	Lamp Follows Input
	Fleeting, Auto Reset
	Fleeting, Manual Reset
Auto-scroll	Off
	5 seconds
	15 seconds

Table 3.6: System Set-up Options

3.5 Setting the Real Time Clock

Omni-Watch makes use of the Real Time Clock in the CPU for time stamping. The engineer may view and set the date and time of the Real Time Clock.

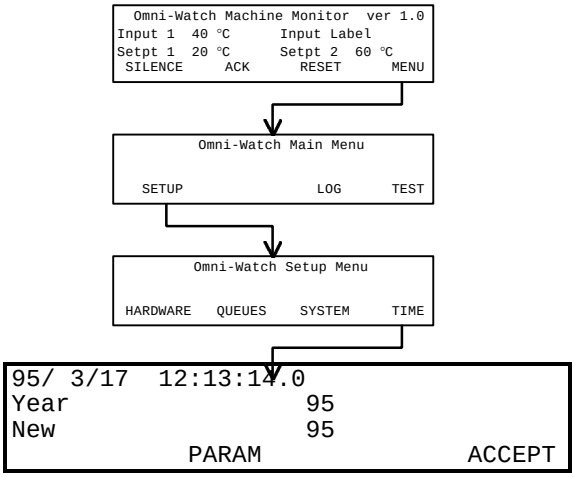

4 Operating Omni-Watch

Following is a sketch of the Omni-Watch front panel showing the types of keys the operator will use.

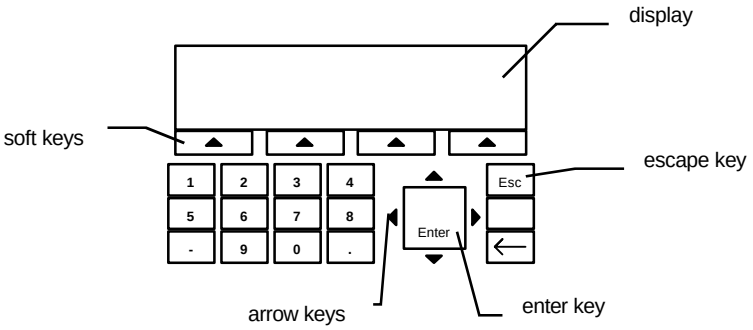

During normal operation, the operator is able to do the following:

- view the current value and set-points of any of the inputs
- handle alarm conditions
- test the led and horn outputs of the front panel
- view any events stored in the history log

4.1 Viewing the Current Value of an Input

To view the current value of an input, the display must show the top most screen which looks as follows:

```
Omni-Watch Machine Monitor  ver 1.0
Input 1  40 °C      Input Label
Setpt 1  20 °C      Setpt 2  60 °C
 SILENCE         ACK           RESET
MENU
```

If the display does not show this screen then press the Escape key until the screen appears. This screen is the most commonly used display and it is usually the one left displayed during normal unmanned operation.

This screen displays the current input number selected, its current value, the input label and both setpoint values.

To select the input desired press the UP or DOWN arrow keys repeatedly until the correct input number is displayed. The data for the input channel will remain displayed until a new input is selected.

4.2 Handling Alarm Conditions

The top level display allows the operator to silence, acknowledge and reset alarms when they occur.

```
Omni-Watch Machine Monitor  ver 1.0
Input 1  40 °C      Input Label
Setpt 1  20 °C      Setpt 2  60 °C
 SILENCE         ACK           RESET
MENU
```

There are four soft key labels available on this screen: SILENCE, ACK (acknowledge), RESET and MENU. MENU is not used for handling alarms. Whenever and alarm occurs, the buzzer on the front panel will sound and the corresponding front panel LED (lamp) will begin flashing according to the alarm sequence configured.

The alarms can be silenced, acknowledged and reset by pressing the soft keys below the labels. Whenever an alarm event occurs Omni-Watch will always put this top level screen on the display so that alarms can be handled immediately. The input displayed on the screen is the last input to go into alarm.

4.3 Omni-Watch Front Panel Test

It is good practise to periodically test the front panel LED outputs and buzzer output. To do the test, the operator must press the MENU soft key and the following screen will appear:

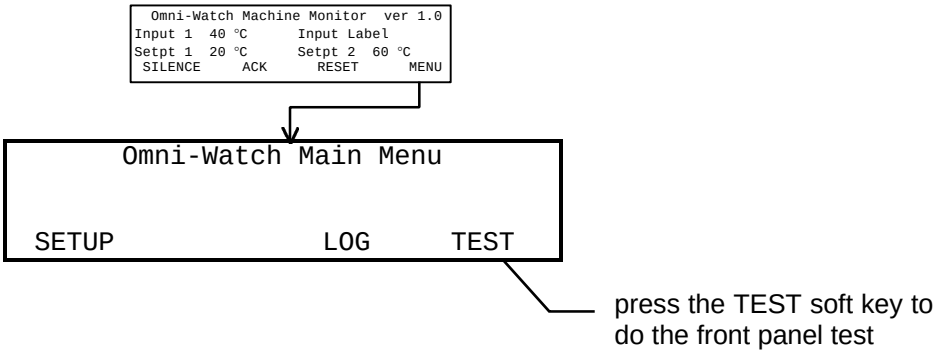

Pressing the TEST soft key will not show any new screen but the buzzer will sound and all the LEDs will turn on for approximately 1 second and then turn off. The LEDs will resume their previous on, off or flashing status after the test.

4.4 Viewing Events in the History Log

Whenever an input goes into or out of alarm, Omni-Watch makes a record of the input along with the time at which the input changed. These records are all stored in a history log. Up to 64 records are stored before the history log fills up. To view events in the log the operator must press the MENU soft key in the top screen and then the LOG soft key in the next screen as follows:

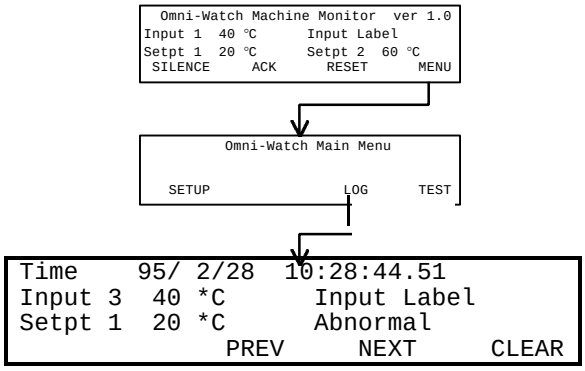

One event is displayed per screen. The first line displays the date and time when the input went into or out of alarm. The second line displays the input number, value of the input and the input label. The third line displays the setpoint level and the input condition: into alarm (abnormal) or out of alarm (return to normal).

Records stay in the history log until the operator/engineer clears them. If the history log overflows then the oldest records will be lost making room for the most recent events.

To view the next or previous record in the history log, press the soft keys beneath the PREV and NEXT labels on the last line of the display. If either or both of these labels do not appear then it means there are no more events to be viewed. To clear the log, press the soft key beneath the CLEAR label.

5 Specifications

5.1 Front Panel Interface

Liquid Crystal Display	:	4 lines by 40 characters, last line for soft keys
Keypad	:	4 soft keys below the last line of LCD
	:	1,2,3,4,5,6,7,8,9,0, minus, decimal point,
	:	Up, Down, Left and Right arrow keys, Enter, Esc, Backspace
Buzzer	:	1
Lamp indication	:	32 LEDs
System indication	:	6 LEDs
Front panel protection	:	IP 64
Front panel dimensions	:	288mm(W) x 192mm(H) x 6mm (D)
Rear of panel dimension	:	Protrudes 250mm behind a 2mm thick panel

5.2 Inputs

Max. number of inputs	:	16	
Supported input types	:	Thermocouple	
	:	Resistance Temperature Device	
	:	Voltage & Current	
Input modules	:	M1432A	8TC/mV
	:	M1433A	6RTD ISO
	:	M1431A	8VC ISO
	:	M1403A	16AI

5.3 Outputs

Analog re-transmit outputs	:	1 per input	
Re-transmit output modules	:	M1412A	8AO
Setpoint outputs	:	2 per input	
Setpoint output modules	:	M1342A	16DO
	:	M1372A	8RO
Number of system outputs	:	8	
System output types	:	Group Alarm 1	
	:	Group Alarm 2	
	:	Gorup Alarm 3	
	:	Group Alarm 4	
	:	Horn On	
	:	Module Fault	
	:	Configuration Fault	
	:	CPU Battery Low	
System output modules	:	M1342A	16DO
	:	M1372A	8RO

5.4 Alarm Annunciation

Number of alarm sequences	:	3
Alarm sequence types	:	Lamp follows input
	:	Fleeting alarm, manual reset
	:	Fleeting alarm, auto reset
Number of Group Alarms	:	2 configurable, 2 fixed
Group Alarm output types	:	Group alarm follows input state
	:	Group alarm follows alarm state
	:	Group alarm acts as multiple reflash

5.5 Sequential Events Recording

Time stamping accuracy	:	100ms plus response of input module (typically 300ms)
Time stamp resolution	:	100ms
History Log Length	:	most recent 64 records

5.6 Network Communications

Network type	:	Conet field bus LAN
Number of nodes	:	127
Speed	:	62 500 baud
Isolation	:	1500 Vrms at each node
Distance	:	Up to 10 km
Medium	:	Shielded twisted pair
Termination	:	Uses 1 x C6169 field termination board at each node
CPU Connection	:	Sub-miniature DB9 connector
Indicators	:	Tx, Rx and Token LEDs
	:	Fault indication - all 3 LEDs steady on

5.7 Queue Service

Function	:	Time stamped event reporting
Queue Number	:	0
Queue Type	:	Output queue
Number of Queue Heads	:	4
Destination Addresses	:	1 primary address per head
	:	1 secondary address per head
Destination routing	:	first to primary address, failing that the secondary address
Master fail detect	:	3 communication attempts
Master retry interval	:	20 seconds
Transmission types	:	Unsolicited transmissions
	:	Polled transmissions
Queue overflow operation	:	Discard old record
	:	Discard new record

5.8 DIT Service

Register Qty	:	3250
Register width	:	16 bits

Appendix I Omni-Watch Menu Tree Diagram

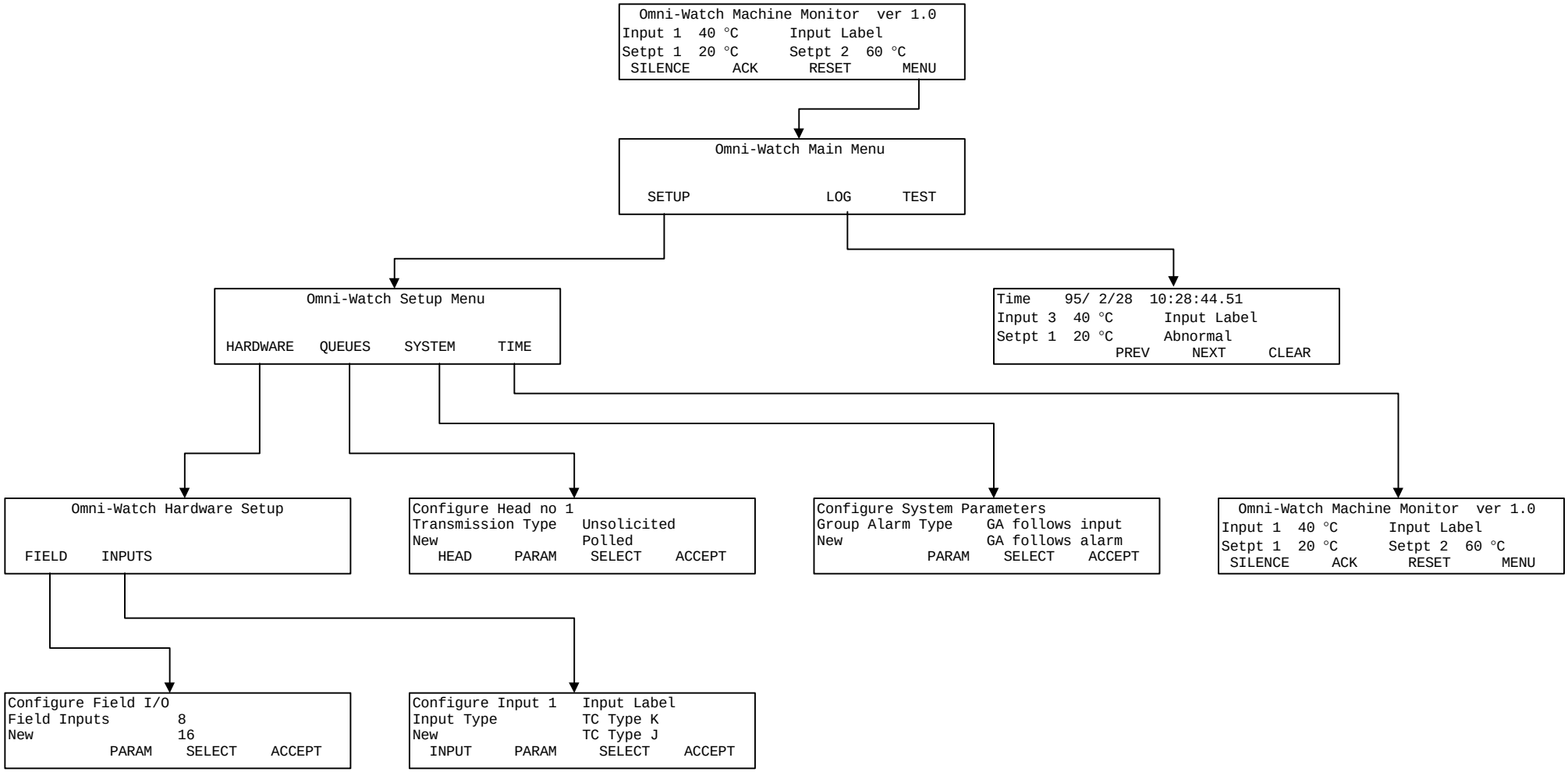

Appendix II Omni-Watch Data Interchange Table

The Maxiflex CPU used to run the Omni-Watch program and drive the front panel maintains a large bank of 16-bit registers called the Data Interchange Table or DIT. The DIT is essentially a medium through which the Omni-Watch program can read and write information to the “outside world”. Access to the DIT is available over the Conet network (via the network port) as well as through a serial programming port on the CPU. The DIT can be viewed on a PC using OMNIFLEX’s diagnostic utilities: Chatterbox (v3.05 or higher) or Ezi-Edit (v2.04 or higher). Consult your nearest OMNIFLEX agent for more details.

Below is a layout of the DIT for Omni-Watch.

DIT Number	Description	Notes
0	Software Version Number	
1	Last DIT Register Number	
2	Supported Services Flag	
3	Node Type	
4	Application Name	
5	Application Name	
6	Application Name	
7	Application Name	
22	Programmer System Reg.	
23	Alive Counter	
24	RTC - Current Year	
25	RTC - Current Month	
26	RTC - Current Date	
27	RTC - Current Day	
28	RTC - Current Hour	
29	RTC - Current Minute	
30	RTC - Current Second	
31	RTC - Current ms	
32	RTC - Power Down Year	
33	RTC - Power Down Month	
34	RTC - Power Down Date	
35	RTC - Power Down Day	
36	RTC - Power Down Hour	
37	RTC - Power Down Minute	
38	RTC - Power Down Second	
39	RTC - Power Down ms	
90	Software Application Name (ASCII)	
98	Software Application Version	
99	Software Application Alive Register	
100	Configuration Flag	
101	Conf Module Slot 1	
102	Conf Module Slot 2	
103	Conf Module Slot 3	
104	Conf Module Slot 4	
105	Conf Module Slot 5	
106	Conf Module Slot 6	
107	Conf Module Slot 7	
108	Conf Module Slot 8	
109	Conf Module Slot 9	
110	Conf Module Slot 10	
111	Conf Module Slot 11	
112	Conf Module Slot 12	
113	Conf Module Slot 13	
114	Conf Module Slot 14	
115	Conf Module Slot 15	
130	Config Protection	
131	O/P Queue Tx Type	
132	O/P Queue Head Type	
133	O/P Q0 Head 0	
134	O/P Q0 Head 1	
135	O/P Q0 Head 2	

136	O/P Q0 Head 3	
331	Raw AO Slot 2 Ch1	
332	Raw AO Slot 2 Ch2	
333	Raw AO Slot 2 Ch3	
334	Raw AO Slot 2 Ch4	
335	Raw AO Slot 2 Ch5	
336	Raw AO Slot 2 Ch6	
337	Raw AO Slot 2 Ch7	
338	Raw AO Slot 2 Ch8	
339	Raw AO Slot 2 Ch9	
340	Raw AO Slot 2 Ch10	
341	Raw AO Slot 2 Ch11	
342	Raw AO Slot 2 Ch12	
343	Raw AO Slot 2 Ch13	
344	Raw AO Slot 2 Ch14	
345	Raw AO Slot 2 Ch15	
346	Raw AO Slot 2 Ch16	
347	Raw AO Slot 3 Ch1	
348	Raw AO Slot 3 Ch2	
349	Raw AO Slot 3 Ch3	
350	Raw AO Slot 3 Ch4	
351	Raw AO Slot 3 Ch5	
352	Raw AO Slot 3 Ch6	
353	Raw AO Slot 3 Ch7	
354	Raw AO Slot 3 Ch8	
355	Raw AO Slot 3 Ch9	
356	Raw AO Slot 3 Ch10	
357	Raw AO Slot 3 Ch11	
358	Raw AO Slot 3 Ch12	
359	Raw AO Slot 3 Ch13	
360	Raw AO Slot 3 Ch14	
361	Raw AO Slot 3 Ch15	
362	Raw AO Slot 3 Ch16	
363	Raw AO Slot 4 Ch1	
364	Raw AO Slot 4 Ch2	
365	Raw AO Slot 4 Ch3	
366	Raw AO Slot 4 Ch4	
367	Raw AO Slot 4 Ch5	
368	Raw AO Slot 4 Ch6	
369	Raw AO Slot 4 Ch7	
370	Raw AO Slot 4 Ch8	
371	Raw AO Slot 4 Ch9	
372	Raw AO Slot 4 Ch10	
373	Raw AO Slot 4 Ch11	
374	Raw AO Slot 4 Ch12	
375	Raw AO Slot 4 Ch13	
376	Raw AO Slot 4 Ch14	
377	Raw AO Slot 4 Ch15	
378	Raw AO Slot 4 Ch16	
555	Raw AI Slot 1 Ch1	
556	Raw AI Slot 1 Ch2	
557	Raw AI Slot 1 Ch3	
558	Raw AI Slot 1 Ch4	
559	Raw AI Slot 1 Ch5	
560	Raw AI Slot 1 Ch6	
561	Raw AI Slot 1 Ch7	
562	Raw AI Slot 1 Ch8	
563	Raw AI Slot 1 Ch9	
564	Raw AI Slot 1 Ch10	
565	Raw AI Slot 1 Ch11	
566	Raw AI Slot 1 Ch12	
567	Raw AI Slot 1 Ch13	
568	Raw AI Slot 1 Ch14	
569	Raw AI Slot 1 Ch15	
570	Raw AI Slot 1 Ch16	
571	Raw AI Slot 2 Ch1	
572	Raw AI Slot 2 Ch2	
573	Raw AI Slot 2 Ch3	

574	Raw AI Slot 2 Ch4	
575	Raw AI Slot 2 Ch5	
576	Raw AI Slot 2 Ch6	
577	Raw AI Slot 2 Ch7	
578	Raw AI Slot 2 Ch8	
579	Raw AI Slot 2 Ch9	
580	Raw AI Slot 2 Ch10	
581	Raw AI Slot 2 Ch11	
582	Raw AI Slot 2 Ch12	
583	Raw AI Slot 2 Ch13	
584	Raw AI Slot 2 Ch14	
585	Raw AI Slot 2 Ch15	
586	Raw AI Slot 2 Ch16	
795	Raw DO Slot 1 Word 1	
796	Raw DO Slot 1 Word 2	
797	Raw DO Slot 2 Word 1	
798	Raw DO Slot 2 Word 2	
799	Raw DO Slot 3 Word 1	
800	Raw DO Slot 3 Word 2	
801	Raw DO Slot 4 Word 1	
802	Raw DO Slot 4 Word 2	
803	Raw DO Slot 5 Word 1	
804	Raw DO Slot 5 Word 2	
805	Raw DO Slot 6 Word 1	
806	Raw DO Slot 6 Word 2	
807	Raw DO Slot 7 Word 1	
808	Raw DO Slot 7 Word 2	
809	Raw DO Slot 8 Word 1	
810	Raw DO Slot 8 Word 2	
811	Raw DO Slot 9 Word 1	
812	Raw DO Slot 9 Word 2	
813	Raw DO Slot 10 Word 1	
814	Raw DO Slot 10 Word 2	
815	Raw DO Slot 11 Word 1	
816	Raw DO Slot 11 Word 2	
817	Raw DO Slot 12 Word 1	
818	Raw DO Slot 12 Word 2	
819	Raw DO Slot 13 Word 1	
820	Raw DO Slot 13 Word 2	
821	Raw DO Slot 14 Word 1	
822	Raw DO Slot 14 Word 2	
823	Raw DO Slot 15 Word 1	
824	Raw DO Slot 15 Word 2	
855	Module Error Status	
856	Setpoint 1 Inputs 16-1	
857	Setpoint 2 Inputs 32-17	
871	Setpoint 2 Inputs 16-1	
872	Setpoint 2 Inputs 32-17	
873	System Status	
1235	Eng AI Slot 1 Ch1	
1236	Eng AI Slot 1 Ch2	
1237	Eng AI Slot 1 Ch3	
1238	Eng AI Slot 1 Ch4	
1239	Eng AI Slot 1 Ch5	
1240	Eng AI Slot 1 Ch6	
1241	Eng AI Slot 1 Ch7	
1242	Eng AI Slot 1 Ch8	
1243	Eng AI Slot 1 Ch9	
1244	Eng AI Slot 1 Ch10	
1245	Eng AI Slot 1 Ch11	
1246	Eng AI Slot 1 Ch12	
1247	Eng AI Slot 1 Ch13	
1248	Eng AI Slot 1 Ch14	
1249	Eng AI Slot 1 Ch15	
1250	Eng AI Slot 1 Ch16	
1251	Eng AI Slot 2 Ch1	
1252	Eng AI Slot 2 Ch2	

1253	Eng AI Slot 2 Ch3	
1254	Eng AI Slot 2 Ch4	
1255	Eng AI Slot 2 Ch5	
1256	Eng AI Slot 2 Ch6	
1257	Eng AI Slot 2 Ch7	
1258	Eng AI Slot 2 Ch8	
1259	Eng AI Slot 2 Ch9	
1260	Eng AI Slot 2 Ch10	
1261	Eng AI Slot 2 Ch11	
1262	Eng AI Slot 2 Ch12	
1263	Eng AI Slot 2 Ch13	
1264	Eng AI Slot 2 Ch14	
1265	Eng AI Slot 2 Ch15	
1266	Eng AI Slot 2 Ch16	

Appendix III Omni-Watch Front Panel Mechanical Mounting Detail

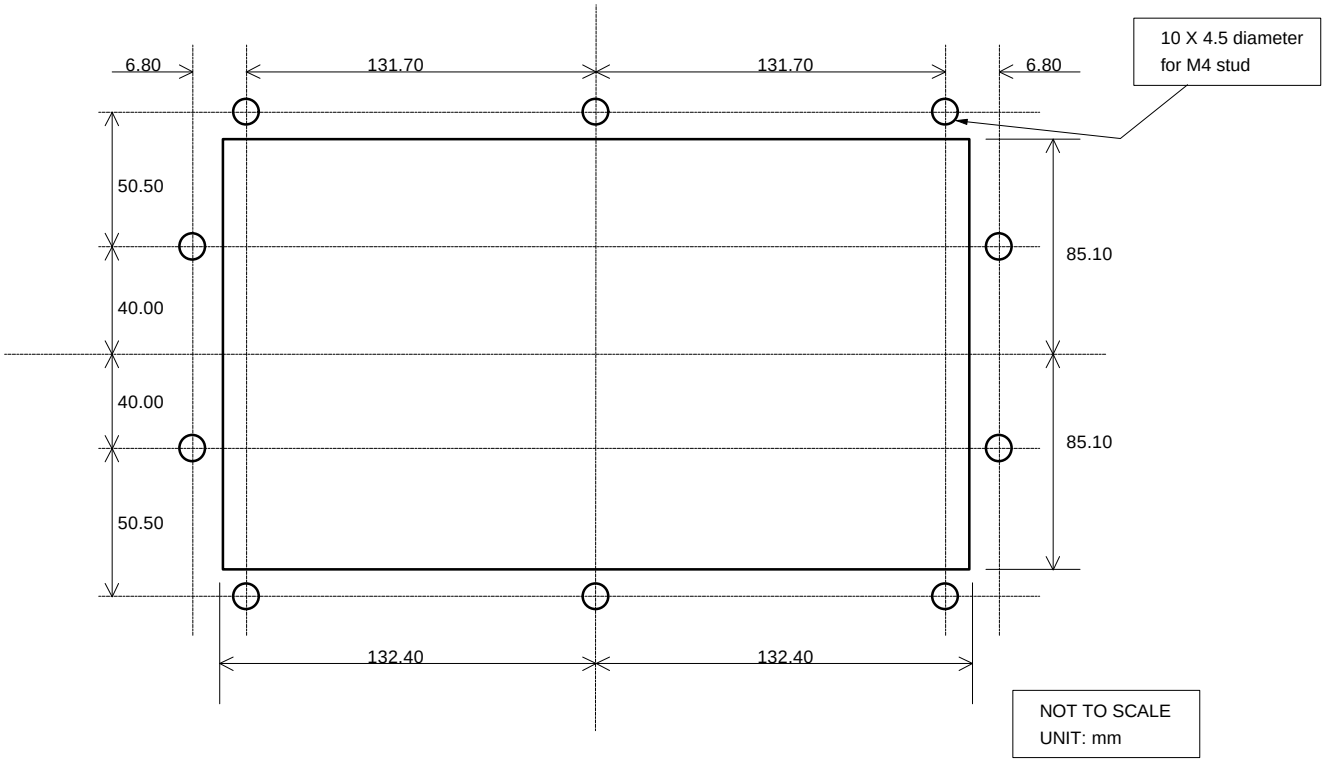

Appendix IV General Electrical Wiring Diagram

	Terminator Pin Designation									
	Power Supply			Field Inputs				Re-transmit Outputs	Setpoint Outputs	System Outputs
Module Type:	**M1102A 24Vdc**	**M1151A 110/220Vac**	**M1152A 110/220Vac**	**M1403A 16 AI**	**M1431A 8 VC**	**M1432A 8 TC/mV**	**M1433A 6 RTD ISO**	**M1412A 8 AO**	**M1324A 16 DO**	**M1372A 8 RO**
Terminator Pin #:										
1	not used	Live	Live	I/P 1	I/P 1	I/P 1	I/P 1-a	O/P 1	O/P 1	1A
2	+24V dc	110Vac link	110Vac link	I/P 2	common 1	common 1	I/P 1-b	common	O/P 2	1B
3	0V	Neutral	Neutral	I/P 3	I/P 2	I/P 2	common 1	O/P 2	O/P 3	2A
4	Earth	Earth	Earth	I/P 4	common 2	common 2	I/P 2-a	common	O/P 4	2B
5		+24V Field	+24V Field	I/P 5	I/P 3	I/P 3	I/P 2-b	O/P 3	O/P 5	3A
6		+24V Field	+24V Field	I/P 6	common 3	common 3	common 2	common	O/P 6	3B
7		0V Field	0V Field	I/P 7	I/P 4	I/P 4	I/P 3-a	O/P 4	O/P 7	4A
8		0V Field	0V Field	I/P 8	common 4	common 4	I/P 3-b	common	O/P 8	4B
9			-Battery	common	I/P 5	I/P 5	common 3	O/P 5	O/P 9	5A
10			+Battery	I/P 9	common 5	common 5	I/P 4-a	common	O/P 10	5B
11			+Sensor	I/P 10	I/P 6	I/P 6	I/P 4-b	O/P 6	O/P 11	6A
12			-Sensor	I/P 11	common 6	common 6	common 4	common	O/P 12	6B
13				I/P 12	I/P 7	I/P 7	I/P 5-a	O/P 7	O/P 13	7A
14				I/P 13	common 7	common 7	I/P 5-b	common	O/P 14	7B
15				I/P 14	I/P 8	I/P 8	common 5	O/P 8	O/P 15	8A
16				I/P 15	common 8	common 8	I/P 6-a	common	O/P 16	8B
17				I/P 16	not used	not used	I/P 6-b	field +ve	common -ve	not used
18				common	not used	not used	common 6	field -ve	common +ve	not used

6 History Sheet

Issue	Ver	Date	Description of Changes
001	01	Oct ‘95	Initial Issue
002	01	Mar ‘96	1. IP 65 rating changed to IP 64. (Refer to Page 26, Section 5.1) 2. Insertion of software Application Name, Version Number and Alive Counter in the Data Interchange Table. (Refer to Page 29, Appendix II) 3. Change of LOG and TEST menu position on LCD display. 4. Comment included to indicate that thermocouple modules will operate on upscale burnout **only,** when used with Omni-Watch. (Refer to Page 7, Section 2.1) 5. Change of 1 hour configuration timer to 5 minutes. (Refer to Page 11, Section 3.1) 6. Comment included to indicate that a Power Supply Module is not required for 5 I/O Expansion Bases. (Refer to Page 7, Section 2.1)
002	02	May ‘96	1. An extra option has been added to configure 12 field inputs. (Refer to Page 13, Table 3) 2. Operation of ‘queues’ corrected. (Refer to page 17, Section 3.3 & Page 19, Section 3.3)
004	04	Aug ’00	Updated to include latest updates to V2.10 of the software.
5	5	Apr. ‘01	Manual Cover updated